Core balance transformers - type A

Dedicated to RESYS

tore_061_a_1_cat

*Split-core balance transformer **ΔIP-R***

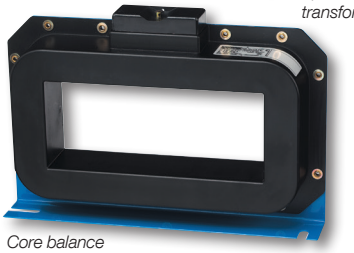

tore_015_a_1_cat

*Core balance transformer **WR***

tore_046_a_1_cat

*Core balance transformer **ΔIC***

The solution for

- Industry
- Infrastructure
- Non critical buildings
- OEM
- Renewable energy

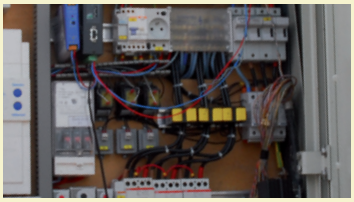

Strong points

- A complete product range
- A wide range of fixing systems (ΔIC & ΔIP-R)
- A patented cable locator (ΔIC & ΔIP-R)
- A rapid installation and safe implementation (ΔIP-R)

Conformity to standards

- IEC 61869-1

Function

The installation of protection or monitoring systems such as earth leakage protection relays involves the use of **core balance transformers**.

Active conductors pass through the aperture of the core balance transformer, providing the differential summation of vector currents which enables the detection of leakage currents.The core balance transformers (toroids) proposed by SOCOMEC meet requirements in terms of measurement sensitivity and are suitable for earth leakage protection relays RESYS M40/P40.

Closed (series ΔIC, WR and TFR) or split-core (series ΔIP-R) types, suit all wiring configurations.

Advantages

A complete product range

All dimensions and types are available for compatibility with any bar and cable configurations or diameters.

A wide range of fixing systems (ΔIC & ΔIP-R)

ΔIC & ΔIP-R core balance transformers can be mounted on DIN-rail, on back-plate or directly on the cable. These products can be adapted into confined spaces with high integration constraints and provide easy and rapid cabling.

A patented cable locator (ΔIC & ΔIP-R)

The SOCOMEC cable locator is a patented innovation. The cable is perfectly centralised in the core balance transformer to ensure accurate measurement and enhanced immunity to network interferences. It also enables direct mounting of the core balance transformer onto the cable.

A rapid installation and safe implementation (ΔIP-R)

Thanks to an innovative “one click” opening/closing system, without the need of additional accessories, split-core ΔIP-R toroids have been designed to ensure a fully safe installation.

Implementation

All of the active conductors must be passed through the detection toroid's aperture.
The protective conductor must pass on the outside of the toroid or pass once for each direction.

Installation limiting distortions during heavy load switching

Installation of the detection toroids

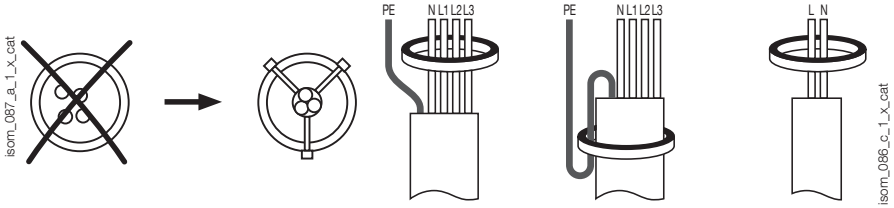

isom_087_a_1_x_cat

isom_086_c_1_x_cat

socomec Innovative Power Solutions

Characteristics

Electrical characteristics	ΔIC	ΔIP-R
Insulation coordination	according to IEC 60664-1	according to IEC 60664-1
Max. operating voltage	720 VAC	720 VAC
Rated impulse voltage	8 kV	8 kV
Assigned withstand voltage	3 kV	3 kV
Degree of pollution	3	3
Winding ratio	600 / 1	600 / 1
Rated primary current	10 A	10 A
Nominal power	20 mVA	50 mVA
Max. accuracy class	3	3
Operating temperature	-40 … +80 °C	-40 … +80 °C
Flammability class	UL94V-0	UL94V-0

Electrical characteristics WR & TFR series	
Insulation coordination	according to IEC 60664-1
Insulation voltage	690 VAC
Rated impulse voltage	8 kV
Dielectric quality	6 kV
Degree of pollution	3
Winding ratio	600 / 1
Rated primary current	10 A
Nominal power	50 mVA
Max. accuracy class	5
Operating temperature	-10 … +55 °C
Flammability class	UL94V-0

Dimensions

Closed toroids - ΔIC series

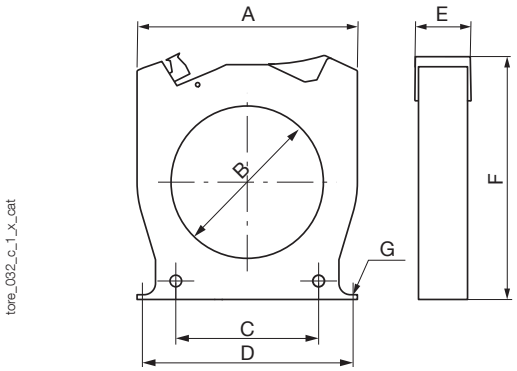

Type	A	B	C	D	E	F	G	Weight (kg)
ΔIC Ø 15	53	17.3	27.8	50	26	81	M4	0.10
ΔIC Ø 30	92	30	50	85	26	103.5	M4	0.13
ΔIC Ø 50	102.5	50	50	90	26	125	M5	0.18
ΔIC Ø 80	116	80	75	105	26	142.5	M5	0.22
ΔIC Ø 120	163	120	100	150	26	182.5	M6	0.38
ΔIC Ø 200	253	200	150	175 x 41.2	51	274	M6	0.88
ΔIC Ø 300	370	300	200	250 x 41.5	50	390	M6	1.72

A. Width
B. Diameter
C. Distance between fixing centres
D. Distance between rear fixing brackets
E. Depth
F. Height
G. Diameter of fixing screws

Rectangular closed toroids - WR series

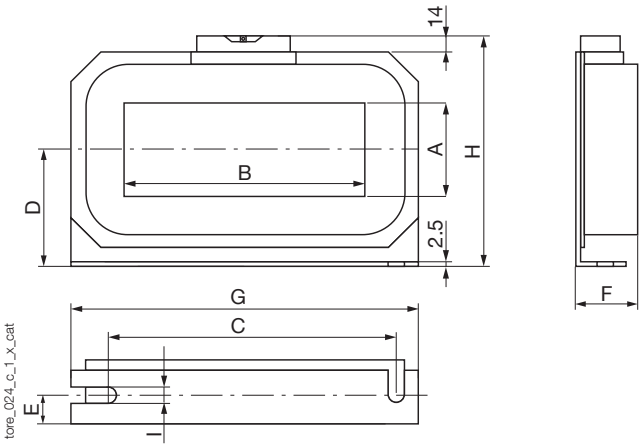

Type	A	B	C	D	E	F	G	H	I	Weight (kg)
WR 70 x 175	70	175	225	85	22	46	261	176	7.5	2.9
WR 115 x 305	115	305	360	116	25	55	402	240	8	6.3
WR 150 x 350	150	350	415	140	28	55	460	285	8	8.2

A. Height of gateway window
B. Width of gateway window
C. Entraxe de fixation
D. Half-height from the base
E. Position of oblong slot
F. Depth
G. Largeur
H. Height
I. Width of oblong slot

Rectangular closed toroids - TFR series

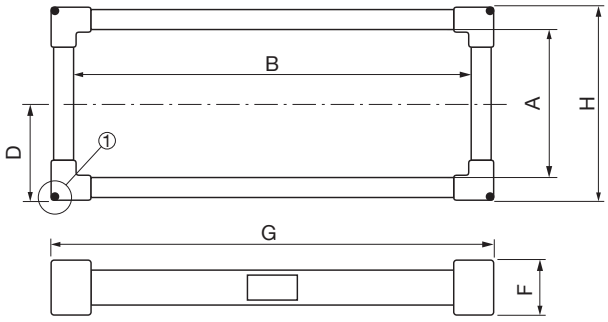

① Detail for fastening the core balance transformer

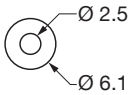

tore_027_h_1_en_cat

Type	A	B	D	F	G	H	Weight (kg)
TFR 200 x 500	200	500	140	62	585	285	7.2

A. Height of gateway window
B. Width of gateway window
D. Half-height from the base
F. Depth
G. Largeur
H. Height

Core balance transformers - type A

Dedicated to RESYS

Dimensions (continued)

Split-core toroids - ΔIP-R

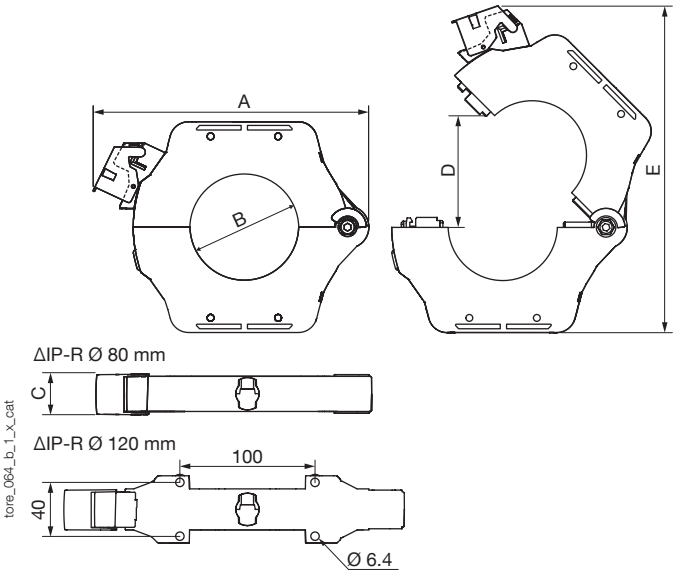

Type	A	B	C	D	E	Weight (kg)
ΔIP-R Ø 80	204	79	30	108	260	0,85
ΔIP-R Ø 120	252	119	30	149	328	1,5

A. Width
B. Diameter
C. Depth
D. Maximum opening.
E. Device height when open

References

Closed toroids type A - ΔIC series

Type	Rated operational current I_n (A)	Toroid diameter (mm)	Reference
ΔIC Ø 15	36	15	4950 **6015**(1)
ΔIC Ø 30	65	30	4950 **6030**(1)
ΔIC Ø 50	85	50	4950 **6050**(1)
ΔIC Ø 80	160	80	4950 **6080**(1)
ΔIC Ø 120	250	120	4950 **6120**(1)
ΔIC Ø 200	400	200	4950 **6200**(1)
ΔIC Ø 300	630	300	4950 **6300**(1)

(1) Toroids for RESYS relays M40 / P40.

Rectangular closed toroids type A - WR and TFR series

Type	Toroid diameter (mm)	Reference
WR 70 x 175	70 x 175	4795 **0717**(1)
WR 115 x 305	115 x 305	4795 **1130**(1)
WR 150 x 350	150 x 350	4795 **1535**(1)
TFR 200 x 500	200 x 500	4795 **2050**(1)

(1) Toroids for RESYS relays M40 / P40.

Split-core toroids type A - WS series(2)

Type	Rated operational current I_n (A)	Toroid diameter (mm)	Reference
ΔIP-R Ø 80	160	80	4750 **6081**(1)
ΔIP-R Ø 120	250	120	4750 **6121**(1)

(1) Toroids for RESYS relays M40 / P40.
(2) DELTA IP-R cores are supplied with a sealable protective cover, plug-in spring terminal block and DIN rail attachment.

Accessories for ΔIC & ΔIP-R toroids

Cable locator

Enables the cables to be centred in the toroid's aperture. Use of this accessory allows the core balance transformer to be directly mounted onto the cables.

terre_040_a_1_cat

Description of accessories	Reference
Cable locator, Ø 30 mm	4950 **0011**
Cable locator, Ø 50 mm	4950 **0012**
Cable locator, Ø 80 mm	4950 **0013**
Cable locator, Ø 120 mm	4950 **0014**

Mounting bracket

Description of accessories	Reference
Mounting bracket, Ø 30 mm	4950 **0001**
Mounting bracket, Ø 50 mm	4950 **0002**
Mounting bracket, Ø 80 mm	4950 **0003**
Mounting bracket, Ø 120 mm	4950 **0003**
Mounting bracket, Ø 200 mm	4950 **0004**
Mounting bracket, Ø 300 mm	4950 **0005**

terre_038_a_1_cat

Detachable screw terminal

Description of accessories	Reference
Detachable screw terminal	4950 **0041**

terre_042_a_1_cat

Detachable push-in terminal

Description of accessories	Reference
Detachable push-in terminal	4950 **0040**

terre_041_a_1_cat

Sealable protection cover

Description of accessories	Reference
Sealable protection cover	4950 **0020**

terre_043_a_1_cat

DIN-rail clip

For DIN-rail mouting SOCOMEC core balance transformers.

Description of accessories	Reference
DIN-rail clip	4950 **0031**

terre_037_a_1_cat